# *Unit-IV*

# *PROGRAMMABLE LOGIC DEVICES (PLD)*

# Introduction

- Discussed Various ICs for performing basic digital operations such as MUX, DEMUX, Adder, Comparator, Code Converter, Shift registers and Counters.
- These ICs are referred to as Fixed Function ICs.
- Designed by Manufacturers in large.
- To design a circuit, a designer can select the ICs for the circuit.

# Why PLDs

- Designers are having more flexibilities to experiment with design
- Can be reprogramed in seconds
- Design modifications carried out in short time - reducing cost
- Large number of PLD have been produced by IC manufacture with variety of flexibilities and options

# Contd…

- The purpose of a PLD device is to permit elaborate digital logic designs to be implemented by the user in a single device.

- Can be erased electrically and reprogrammed with a new design, making them very well suited for academic and prototyping

# PROGRAMMABLE LOGIC DEVICES

Types of PLD

- **Read Only Memory (ROM)** - a fixed array of AND gates and a programmable array of OR gates

- **Programmable Array Logic (PAL)** - a programmable array of AND gates feeding a fixed array of OR gates.

- **Programmable Logic Array (PLA)** - a programmable array of AND gates feeding a programmable array of OR gates.

# Contd…..

- They all have an input connection matrix, which connects the inputs of the device to an array of AND-gates.

- They all have an output connection matrix, which connect the outputs of the AND-gates to the inputs of OR-gates which drive the outputs of the device.

- The differences of three categories are
- In a ROM, the input connection matrix is hardwired. The user can modify the output connection matrix.
- In a PAL the output connection matrix is hardwired. The user can modify the input connection matrix.
- In a PLA the user can modify both the input connection matrix and the output connection matrix.

| Device | AND-array | OR-array |
|---|---|---|
| PROM | Fixed | Programmable |
| PLA | Programmable | Programmable |
| PAL | Programmable | Fixed |

# General structure of PLDs.

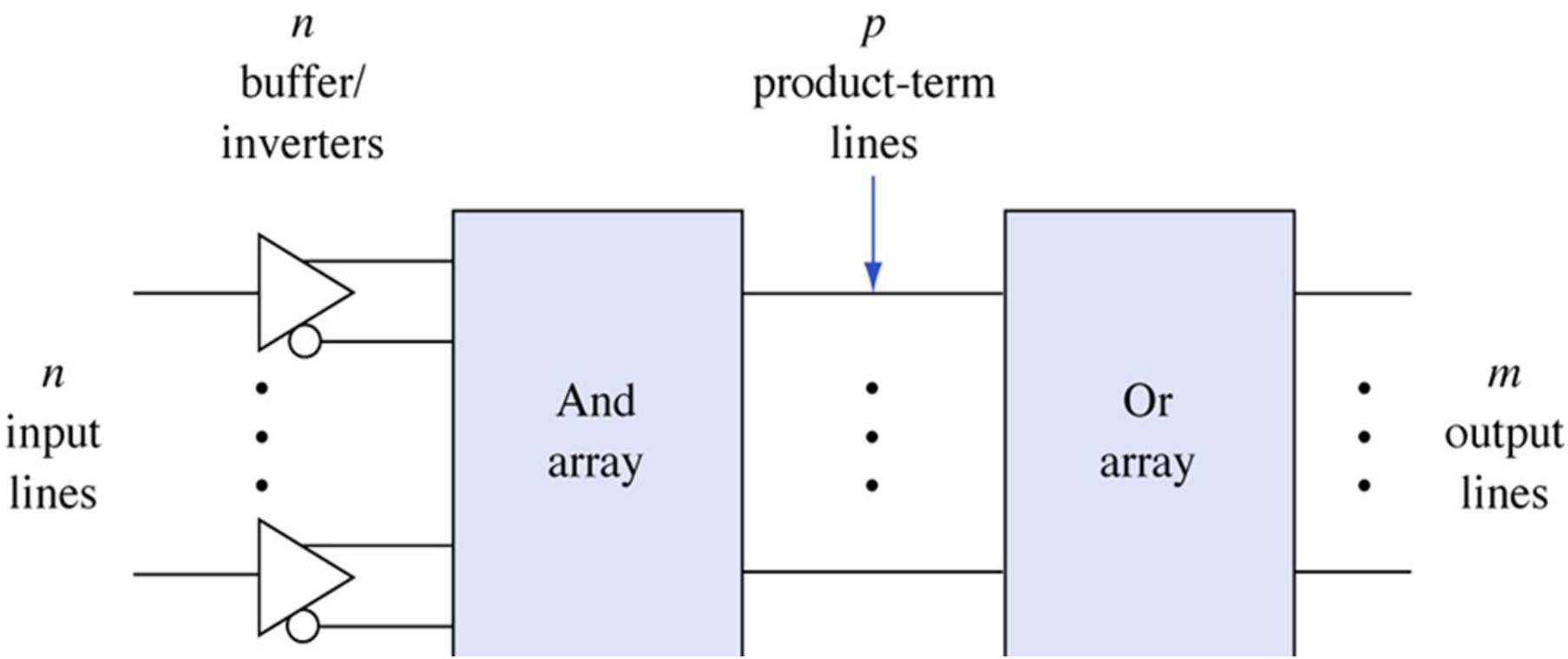

# Programming by blowing fuses.

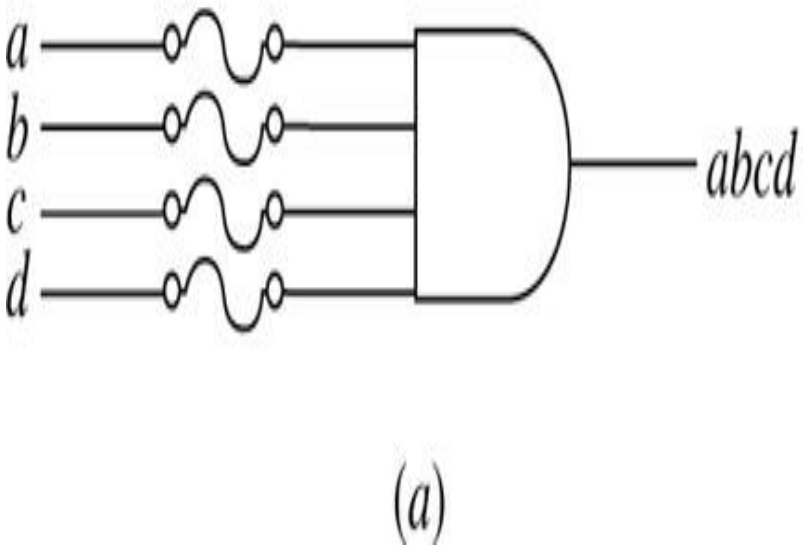


a) Before programming.

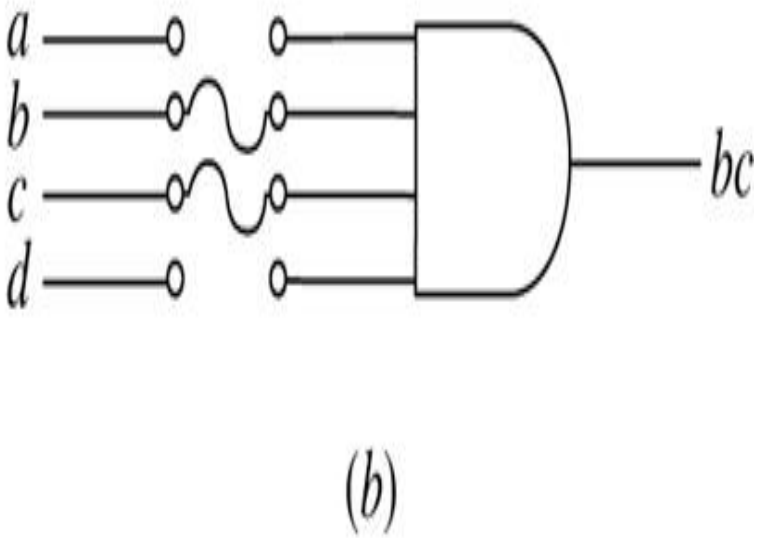


(b) After programming.

# OR - PLD Notation

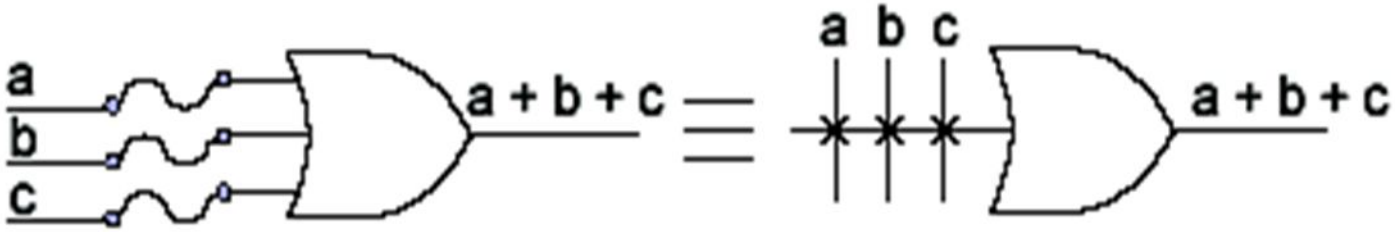


OR gate before programming

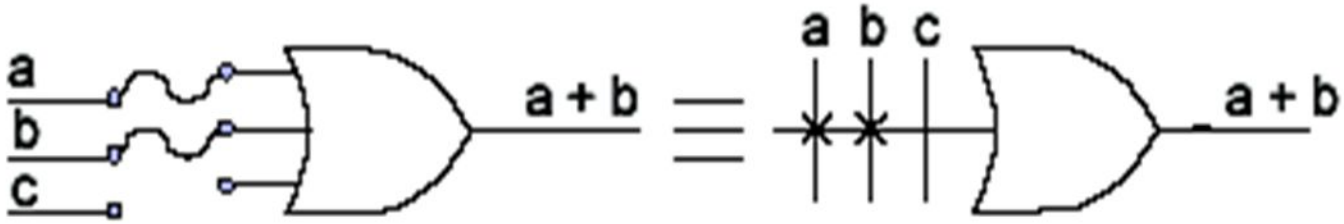


OR gate after programming

# AND - PLD Notation

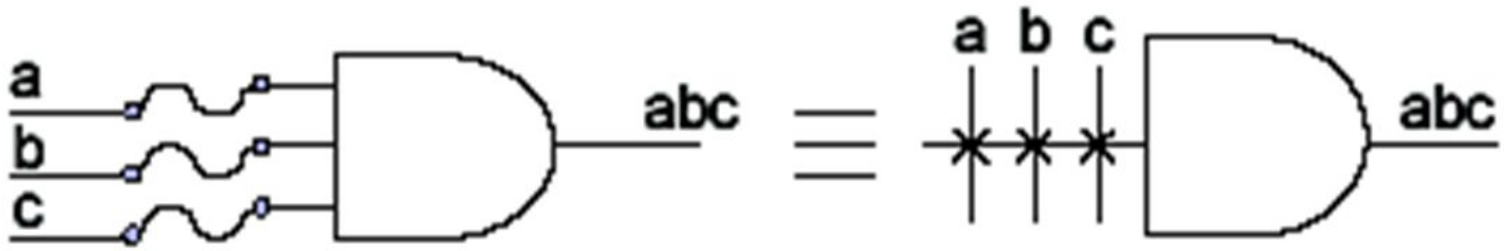


AND gate before programming

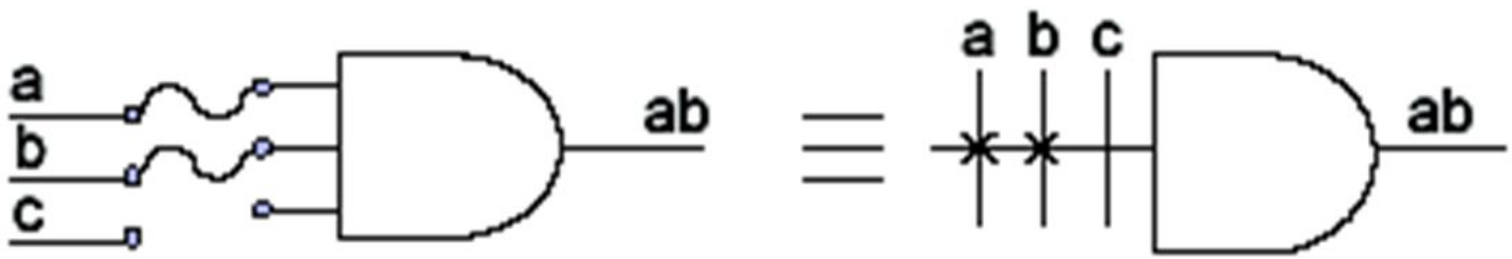


AND gate after programming

# ROM, PAL and PLA Configurations

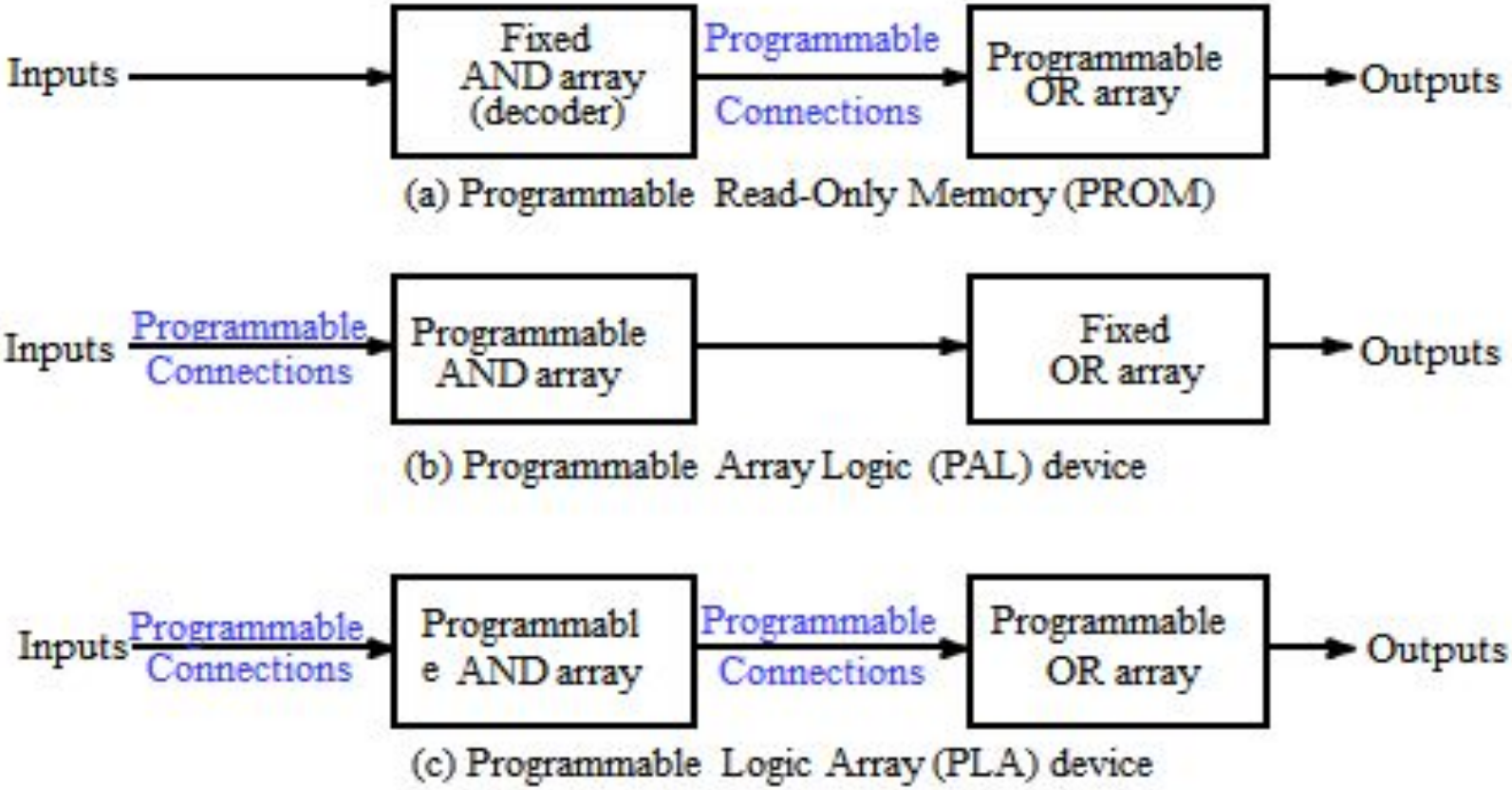


Logic and Computer Design Fundamentals, 4e
PowerPoint® Slides
© 2008 Pearson Education, Inc.

# Programmable Read Only Memory (PROM)

- Read Only Memory ROM is a memory device, which stores the binary information permanently.

- If the ROM has programmable feature, then it is called as **Programmable ROM** PROM. The user has the flexibility to program the binary information electrically once by using PROM programmer.

- PROM is a programmable logic device that has fixed AND array & Programmable OR array.

# **Block diagram** of PROM

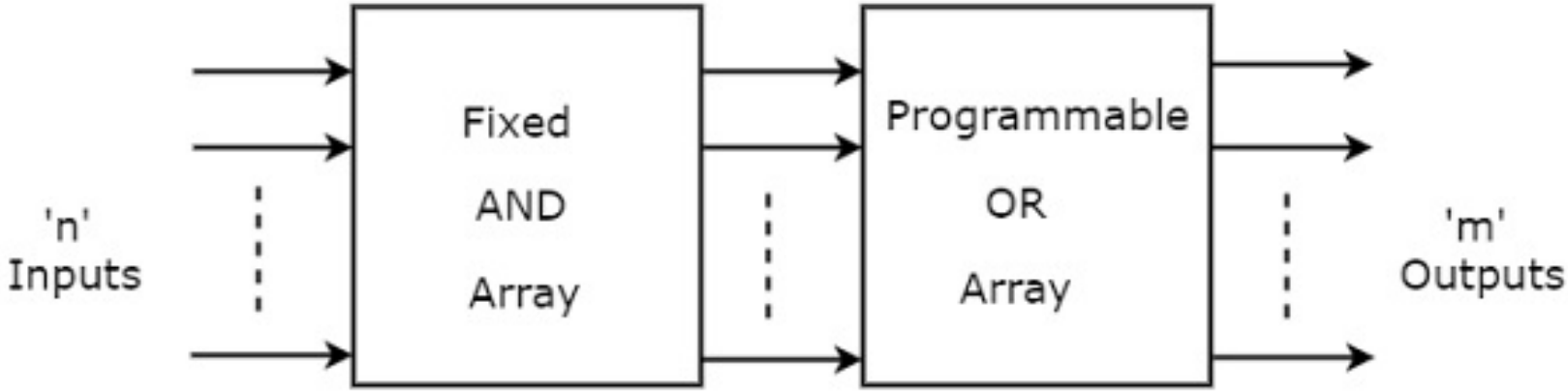

- Here, the inputs of AND gates are not of programmable type. So, we have to generate $2^n$ product terms by using $2^n$ AND gates having n inputs each. We can implement these product terms by using $nx2^n$ decoder. So, this decoder generates 'n' **min terms**.
- Here, the inputs of OR gates are programmable. That means, we can program any number of required product terms, since all the outputs of AND gates are applied as inputs to each OR gate. Therefore, the outputs of PROM will be in the form of **sum of min terms**.

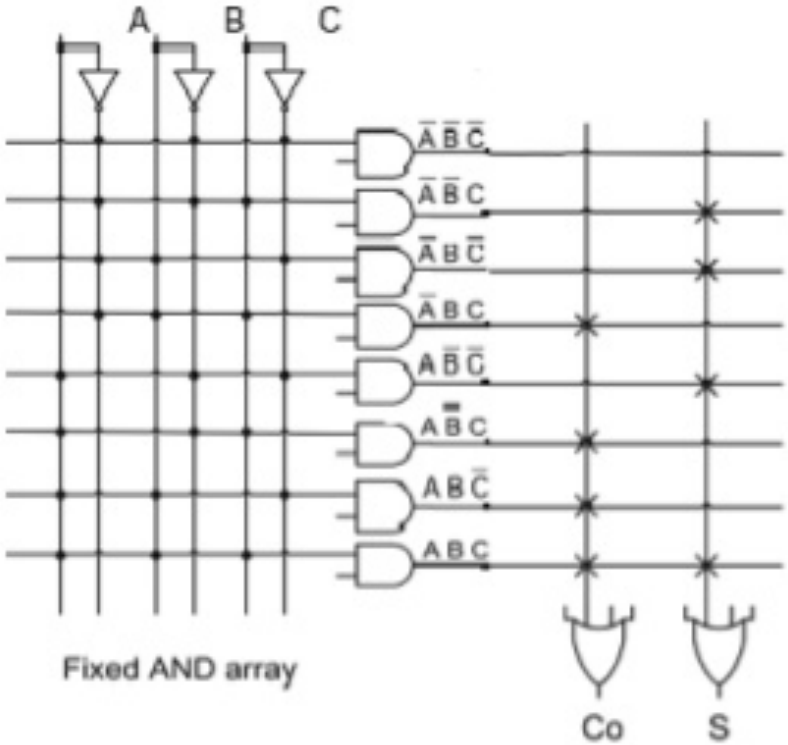

# Exercise

- Implement the following **Boolean functions** using PROM.

  $A(X,Y,Z)=\sum m(5,6,7)$

  $B(X,Y,Z)=\sum m(3,5,6,7)$

- 3 to 8 decoder generates eight min terms.
- The two programmable OR gates have the access of all these min terms.
- But, only the required min terms are programmed in order to produce the respective Boolean functions by each OR gate.
- The symbol 'X' is used for programmable connections.

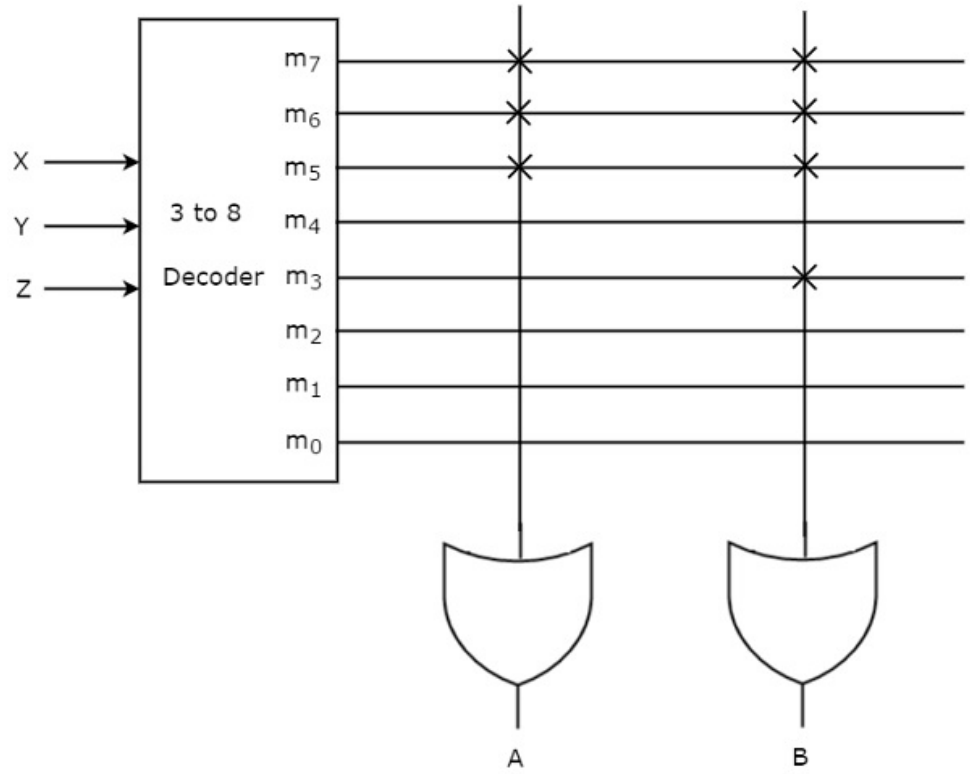

# Contd..

Depending on the programming technology and approaches, read-only memories have different names

1. ROM –
2. PROM –
3. EPROM – erasable floating gate programmed
4. EEPROM or E2PROM – electrically erasable floating gate programmed

# Programmable Array Logic

- PAL is a programmable logic device that has Programmable AND array & fixed OR array.
- The advantage of PAL is that we can generate only the required product terms of Boolean function instead of generating all the min terms by using programmable AND gates.

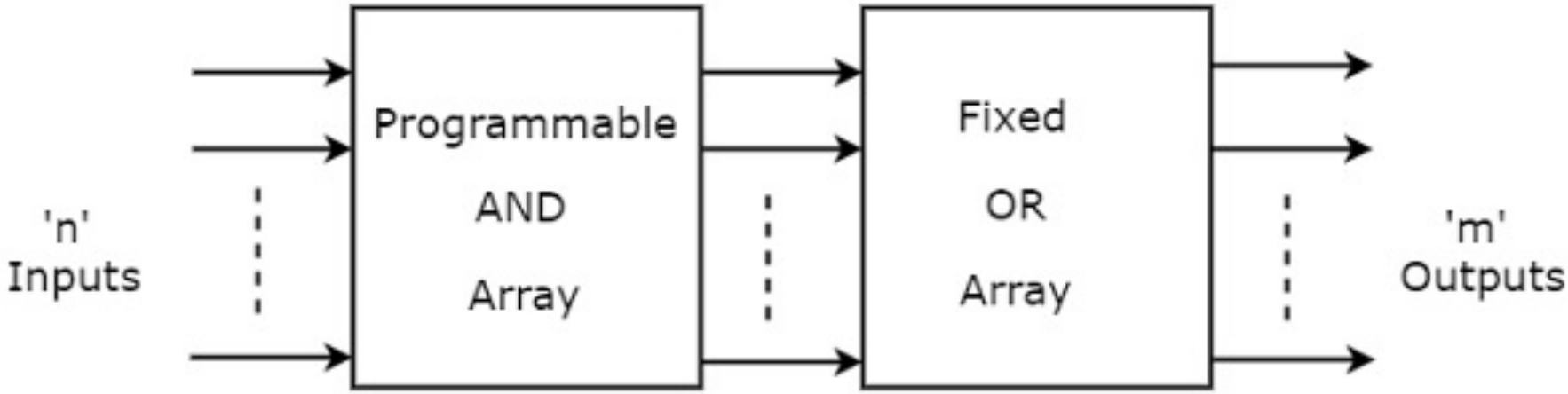

# Programmable Array Logic

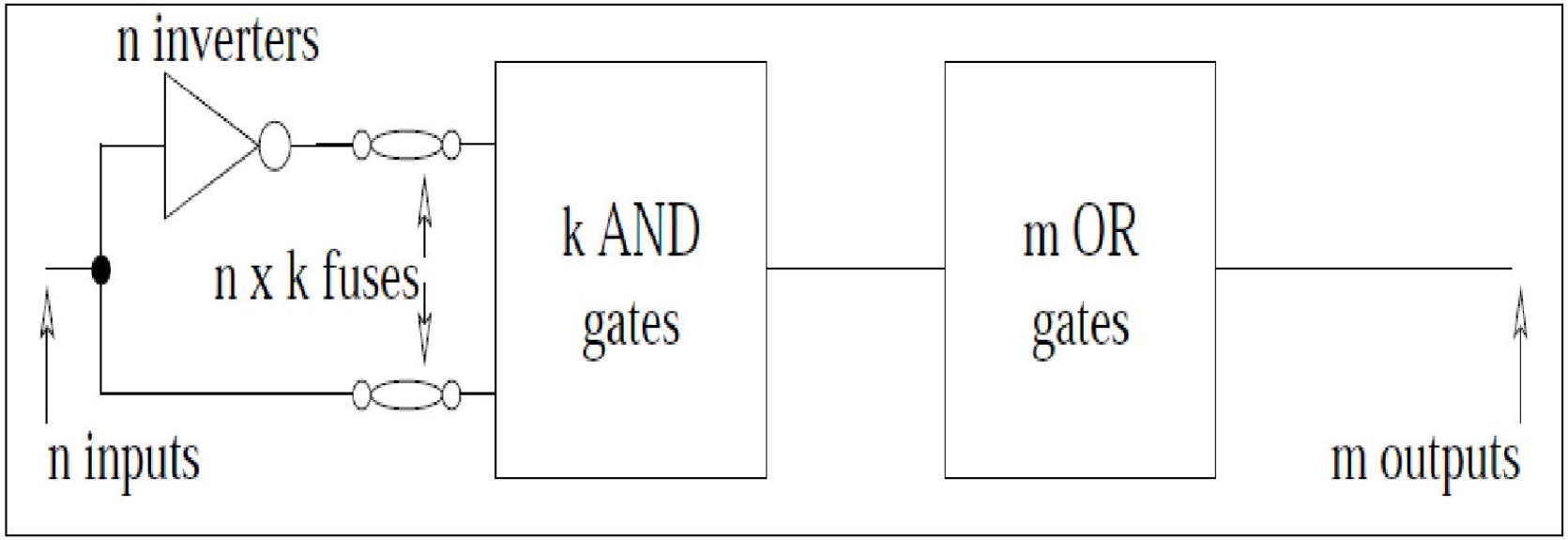

# PAL

- Here, the inputs of AND gates are programmable. That means each AND gate has both normal and complemented inputs of variables. So, based on the requirement, we can program any of those inputs. So, we can generate only the required **product terms** by using these AND gates.

- Here, the inputs of OR gates are not of programmable type. So, the number of inputs to each OR gate will be of fixed type. Hence, apply those required product terms to each OR gate as inputs. Therefore, the outputs of PAL will be in the form of **sum of products form**.

# Contd..

- Implement the following **Boolean functions** using PAL.
- A=XY+XZ’
- A=XY’+YZ’
-

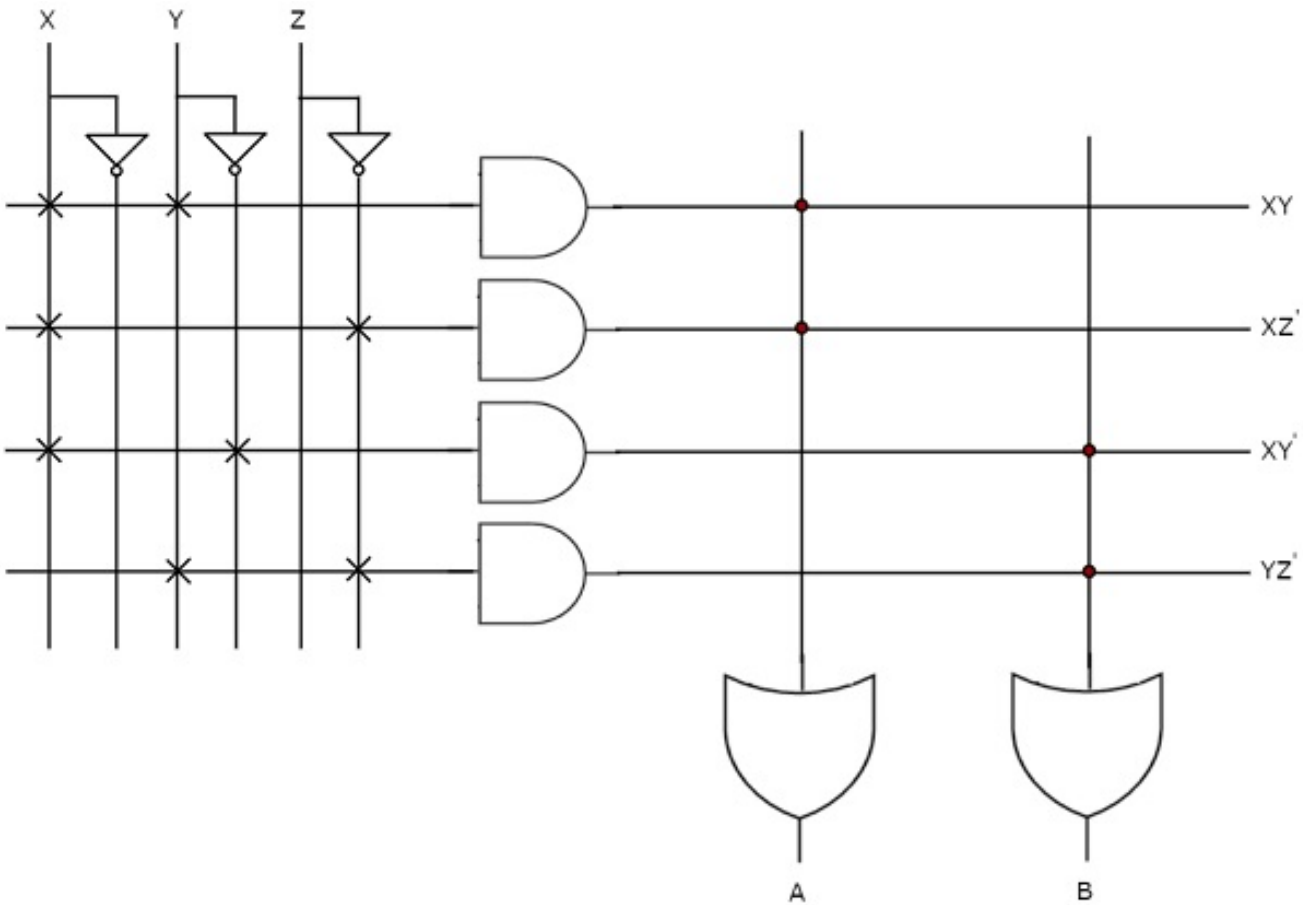

# Implementing a Combinational Circuit Using a PAL

- $W(A, B, C, D) = \sum m(2, 12, 13)$
- $X(A, B, C, D) = \sum m(7, 8, 9, 10, 11, 12, 13, 14, 15)$
- $Y(A, B, C, D) = \sum m(0, 2, 3, 4, 5, 6, 7, 8, 10, 11, 15)$
- $Z(A, B, C, D) = \sum m(1, 2, 8, 12, 13)$

# Programmable Logic Array

# Contd..

- A PLA consist of two level AND-OR circuit on single chip.
- The no. of AND and OR gates and their inputs are fixed for a given PLA chips.
- AND gates – product term
- OR gates – Sum these product term to generate SOP expression.
- It has M inputs, n product term and N outputs.

# Contd..

- Behave like a ROM but has different structure
- Uses ANDs array instead of decoder to produce product terms of inputs
- Has programmable connections before ANDs, between ANDs and ORs, after ORs.
- More flexible than ROM but more difficult to program

# Contd..

- Logic expressions for content information to be stored in PLA must be obtained first, then minimized, and finally programmed into the PLA using a PLA program table

- PLA program table specifies product terms and sum terms of information that will be stored in PLA

# AND matrix

- Each AND gate has 2M inputs where the inputs range from I0 to IM-1.
- There is a nichrome fuse link connected in series with each input. In an unprogrammed PLA all fuse links are intact.
- When we have to implement a logic function that is program the array, the desired connections are left intact (marked with an ‘x’) while the unwanted nichrome links are opened (in such case an ‘x’ mark is not).
- The output is thus a product term.

# OR matrix

- The outputs of AND matrix is connected to OR matrix. This is also provided with nichrome fuse links and hence can also be programmed.
- The output of the OR array gives the sum of products.
- The OR matrix is programmed by open circuiting the unwanted fuse links.
- The open fuse links are equivalent to a ‘0’ at the input of the corresponding OR gate.

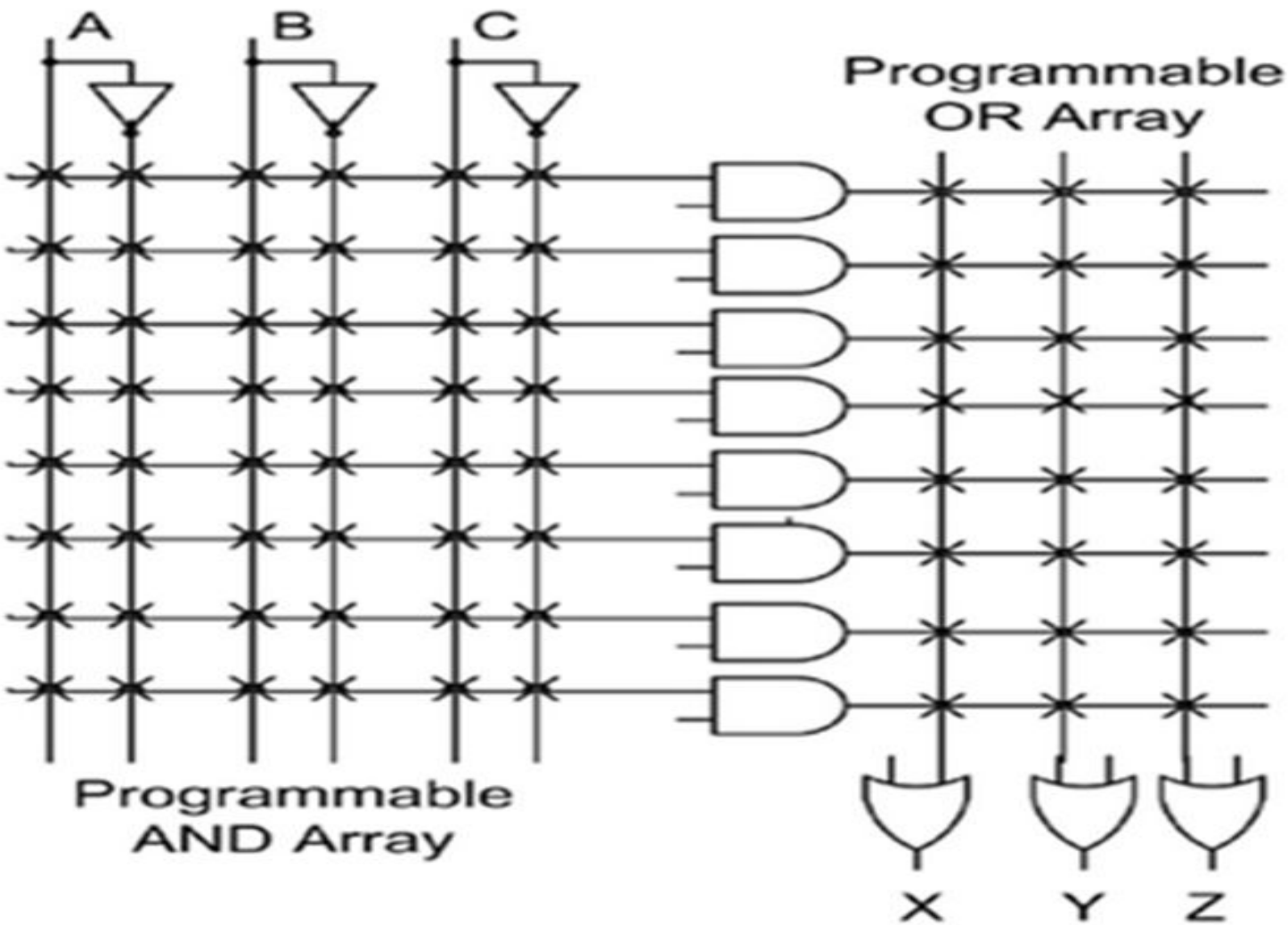


Fig Structure of PLA

# Programmable Logic Arrays (PLAs)

- Pre-fabricated building block of many AND/OR gates
  - ”Personalized" by making or breaking connections among gates
  - Both AND & OR arrays are programmable.
  - Programmable array block diagram for sum of products form

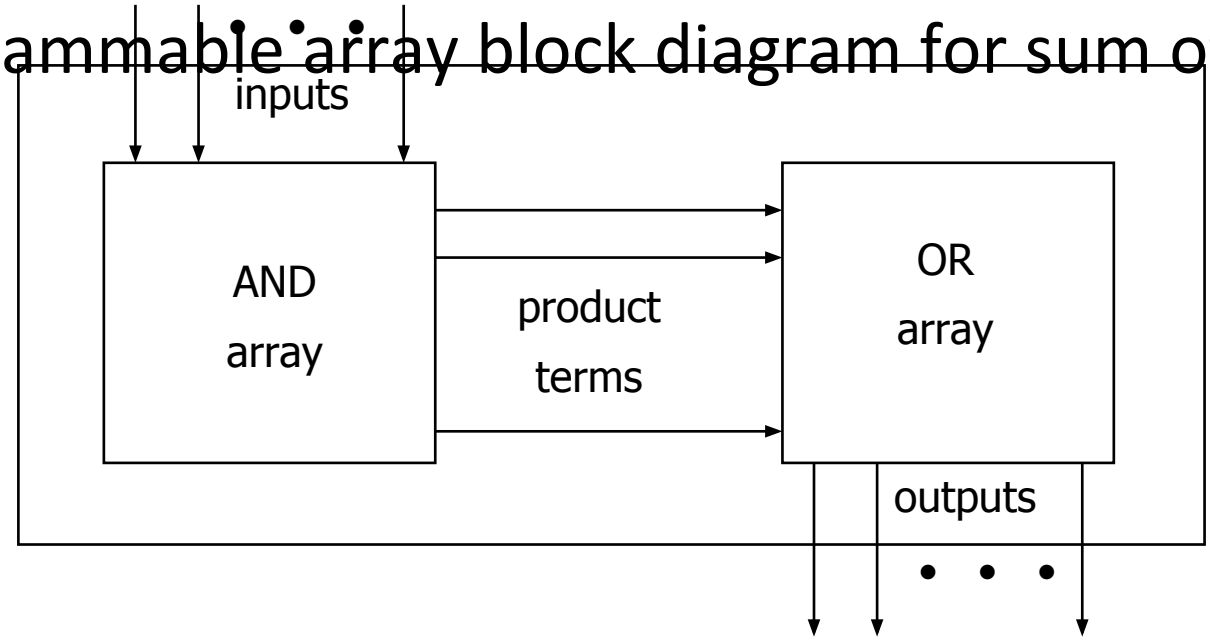

# Design of Boolean functions using PLA

**Example 1:**

F0 = A + B' C'
F1 = A C' + A B
F2 = B' C' + A B
F3 = B' C + A

- Shared product terms among outputs

AB, B'C, AC', B'C', A

## PLA Program Table:

| product | term | inputs A | B | C | outputs F0 | F1 | F2 | F3 |
|---|---|---|---|---|---|---|---|---|
| AB | 1 | 1 | – | 0 | 1 | 1 | 0 | |
| B'C | – | 0 | 1 | 0 | 0 | 0 | 1 | |
| AC' | 1 | – | 0 | 0 | 1 | 0 | 0 | |
| B'C' | – | 0 | 0 | 1 | 0 | 1 | 0 | |
| A | 1 | – | – | 1 | 0 | 0 | 1 | |

input side:

1 = uncomplemented in term
0 = complemented in term
– = does not participate

output side:

1 = term connected to output
0 = no connection to output

# Design of Boolean functions using PLA

**Example 2:** F0 = A B + A' B'

F1 = C D' + C' D

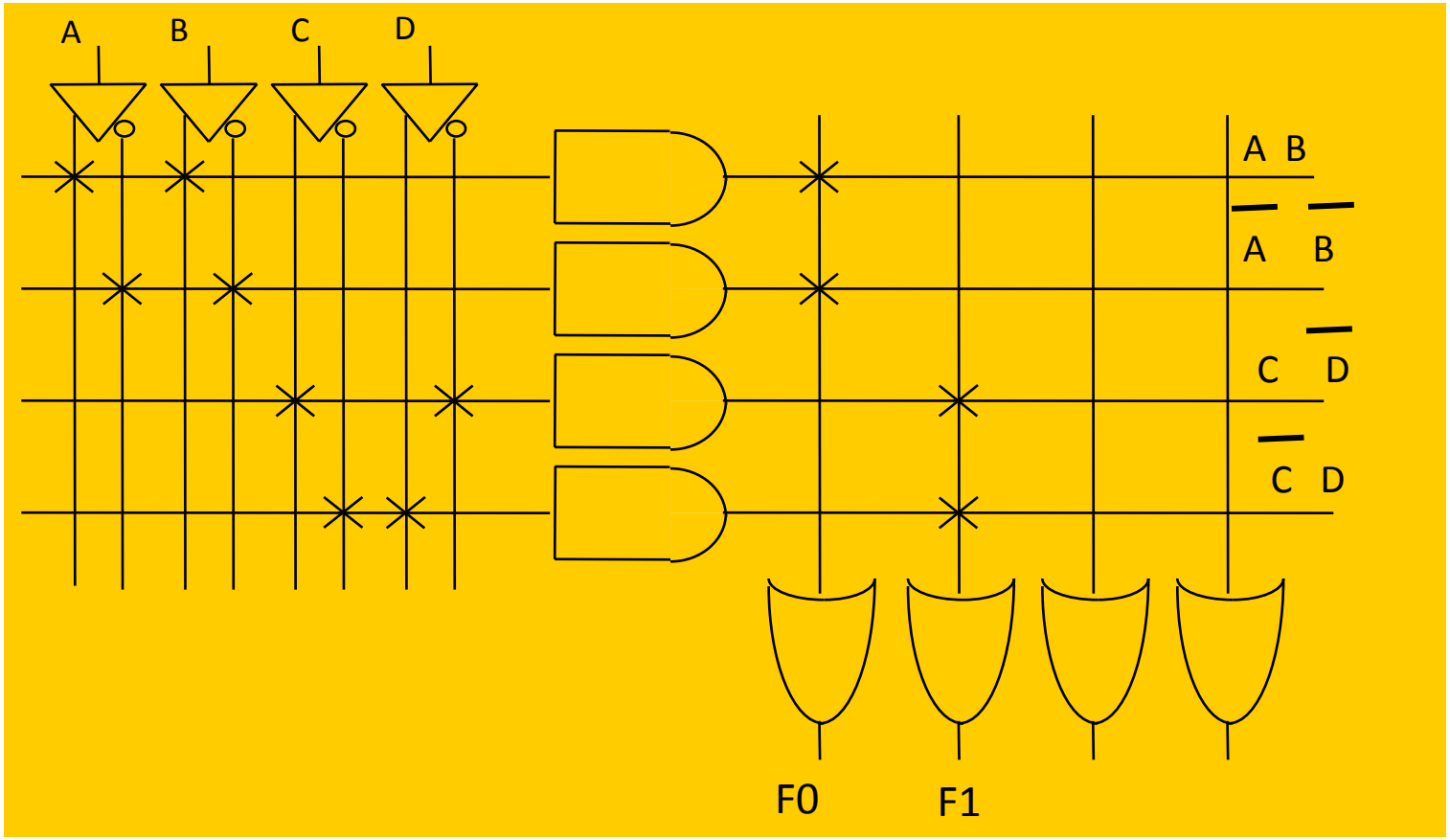

# PLA Design Example

- **Example 3**: code converter

| A | B | C | D | W | X | Y | Z |
|---|---|---|---|---|---|---|---|
| 0 | 0 | 0 | 0 | 0 | 0 | 0 | 0 |
| 0 | 0 | 0 | 1 | 0 | 0 | 0 | 1 |
| 0 | 0 | 1 | 0 | 0 | 0 | 1 | 1 |
| 0 | 0 | 1 | 1 | 0 | 0 | 1 | 0 |
| 0 | 1 | 0 | 0 | 0 | 1 | 1 | 0 |
| 0 | 1 | 0 | 1 | 1 | 1 | 1 | 0 |
| 0 | 1 | 1 | 0 | 1 | 0 | 1 | 0 |
| 0 | 1 | 1 | 1 | 1 | 0 | 1 | 1 |
| 1 | 0 | 0 | 0 | 1 | 0 | 0 | 1 |
| 1 | 0 | 0 | 1 | 1 | 0 | 0 | 0 |
| 1 | 0 | 1 | – | – | – | – | – |
| 1 | 1 | – | – | – | – | – | – |

minimized functions:

W = A + B D + B C
X = B C'
Y = B + C
Z = A'B'C'D + B C D + A D' + B' C D'

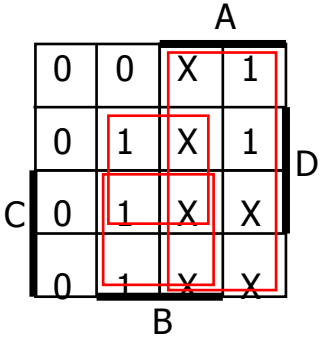


K-map for W

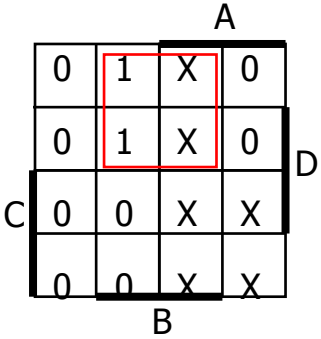


K-map for X

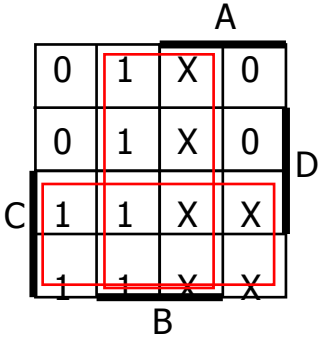


K-map for Y

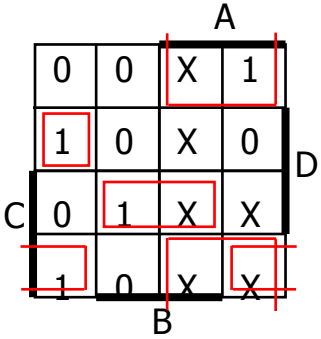


K-map for Z

# PLA Design Example (cont'd)

- Code converter: programmed PLA

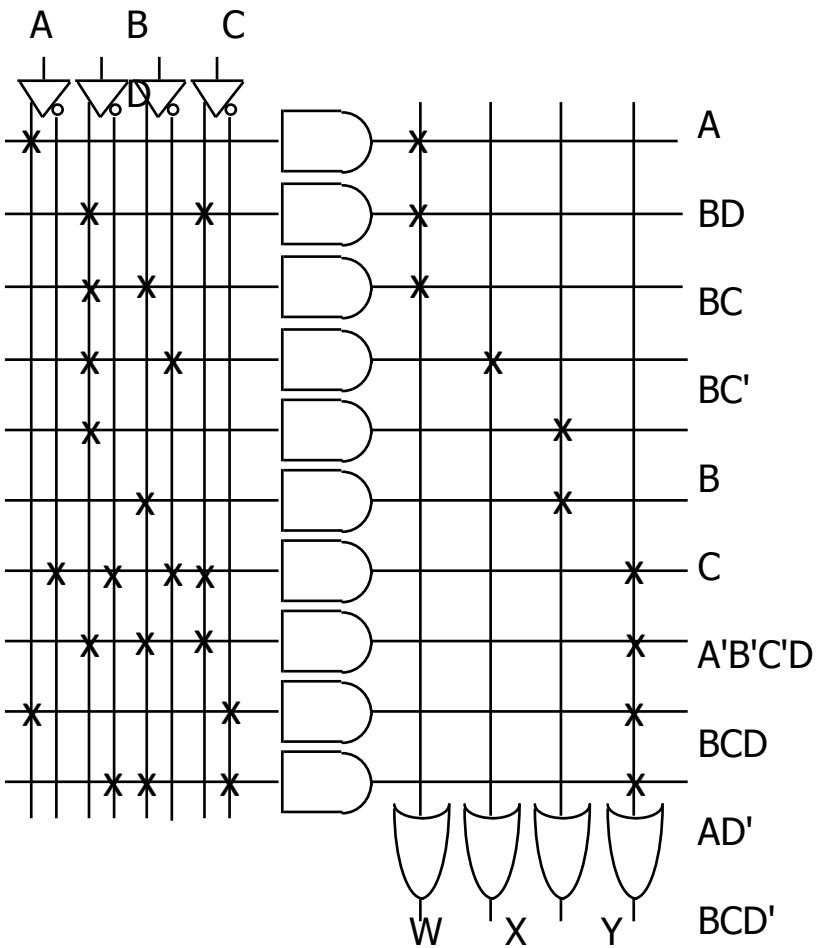


minimized functions:

W = A + B D + B C
X = B C'
Y = B + C
Z = A'B'C'D + B C D + A D' + B' C D'

# PLA Design **Example 4**: Magnitude comparator

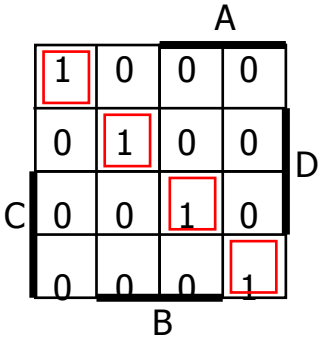


K-map for EQ

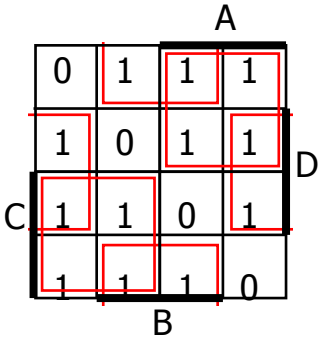


K-map for NE

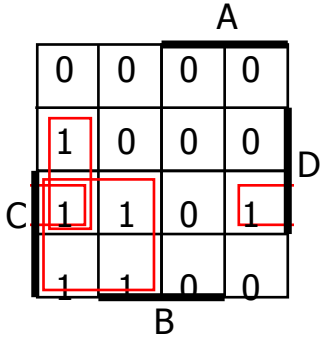


K-map for LT

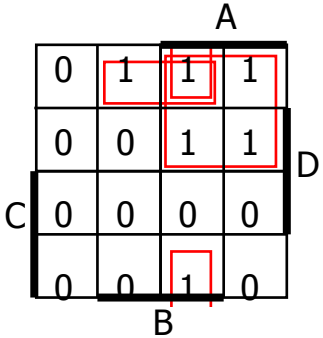


K-map for GT

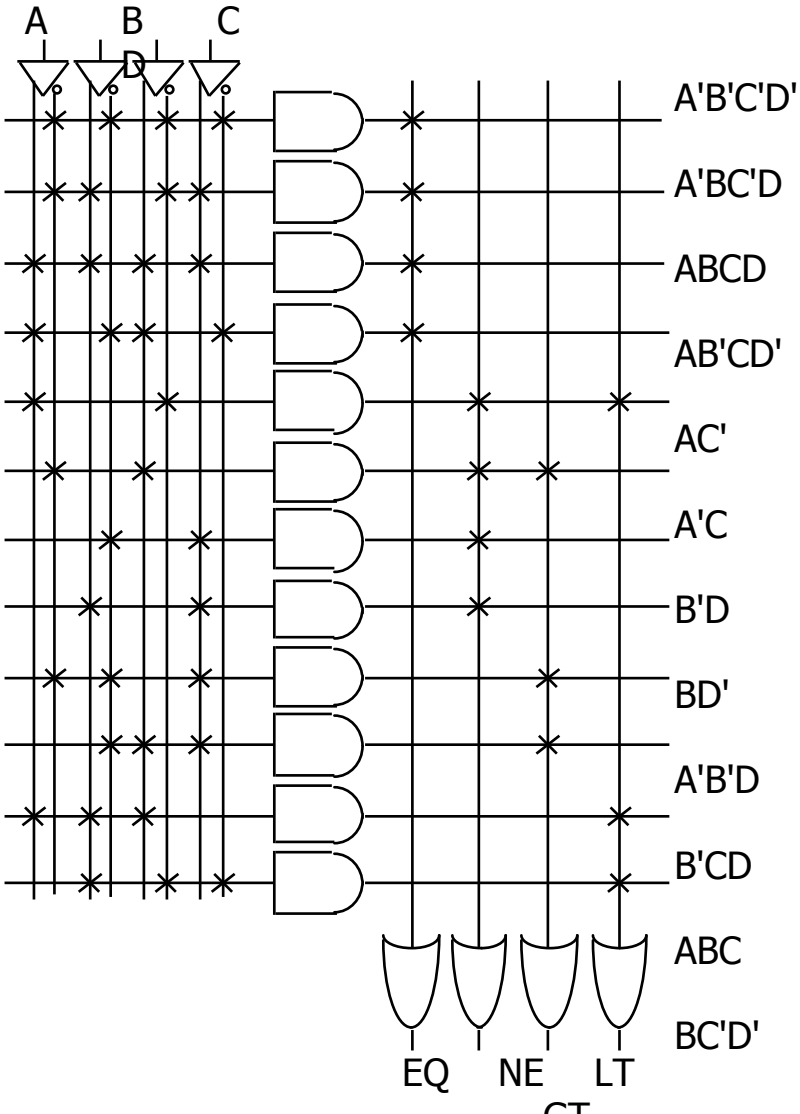

# Application of PLA

Used to implement Combinational and Sequential logic circuits.

Steps to implement Combinational circuits.

1) Prepare the truth table
2) Write equation in SOP form
3) Solve equation to obtain minimum SOP form
4) Determine the input connection of AND matrix to generate the required product term
5) Determine the input connection of OR matrix to generate the required sum term
6) Determine the connections required for INVERT/ NON-INVERT matrix to set the active logic levels of the outputs
7) Program the PLA

# Difference between PLA and PAL.

- PLA has both programmable AND and OR planes whereas PAL has only programmable AND planes and OR plane is fixed
- PLA has more flexibility in the logic circuit function implementation than PAL
- PAL is simpler to manufacture than PLA
- PLA have reduced speed performance
- PAL devices are manufactured in smaller size.